DR2347B | Graphite Brush

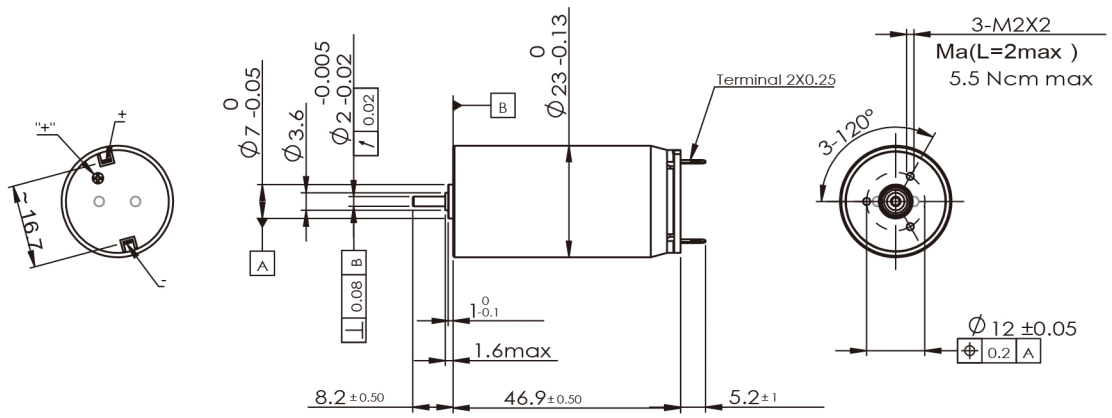

Motor Data

	电机型号	Motor model			DR234709B	DR234724B-01	DR234724B-02		
1	额定电压	Nominal voltage	V	V	9	24	24		
2	空载转速	No load speed	rpm	Wnl	7370	7570	11000		
3	空载电流	No load current	mA	InI	<40	<18	<40		
4	额定转速	Nominal speed	rpm	Wc	6160	6350	9860		
5	额定转矩	Nominal torque	mNm	Tc	17	28.1	26.7		
6	额定电流	Nominal current	A	Ic	1.46	0.93	1.29		
7	输出功率	Output power	W	Pc	11	18.7	27.5		
8	堵转扭矩	Stall torque	mNm	Tmax	101	126.8	243.1		
9	堵转电流	Stall current	A	Imax	8.74	4.2	11.7		
10	最大效率	Max. efficiency	%	ηmax	83	80	80		
11	线间电阻	Terminal resistance	Ω	Rt	1.03	5.7	2.05		
12	力矩系数	Torque constant	mNm / A	Kt	11.6	30.2	20.7		
13	速度常数	Speed constant	rpm / V	Kn	823	315	460		
14	速度扭矩比	Speed torque gradient	rpm / mNm	Δn / ΔT	71.2	43.4	44		
15	线间电感	Terminal inductance	mH	L	0.11	0.45	1.07		
16	转子转动惯量	Rotor inertia	gcm²	J	9.7	9.4	9.4		

Specifications

1	ambient temperature	Ta	-20~+65°C
2	Max.winding temperature	Tcoilmax	+85°C
3	Max.speed	Nmax	16000rpm
4	axial play	△t	0.05~0.15mm
5	number of pole pairs	p	1
6	number of commutator segments		5
7	weight of motor	Wt	95g
8	Max.axial load(dynamic)		3N
9	Max.force for press fits(static)		45N
10	Max.radial load,4mm from flange		12N

Operating Range

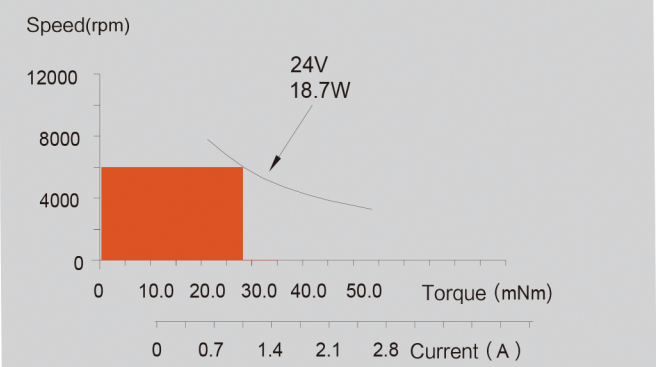

SMJ Modular System

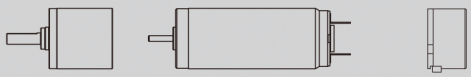

Planetary Gearhead
Type P22H
Diameter φ22
Torque 0.031~1.2N·m
See page 37

Encoder HKT22
256 CPT
2 channels
see page 33